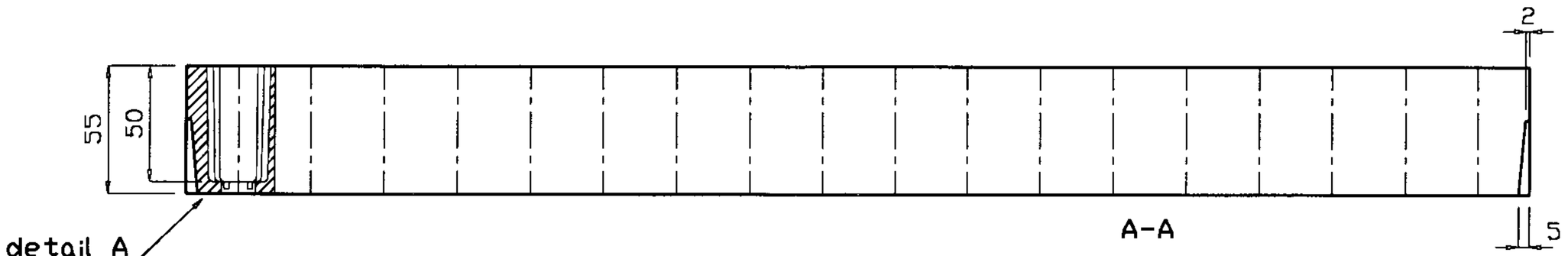

detail A

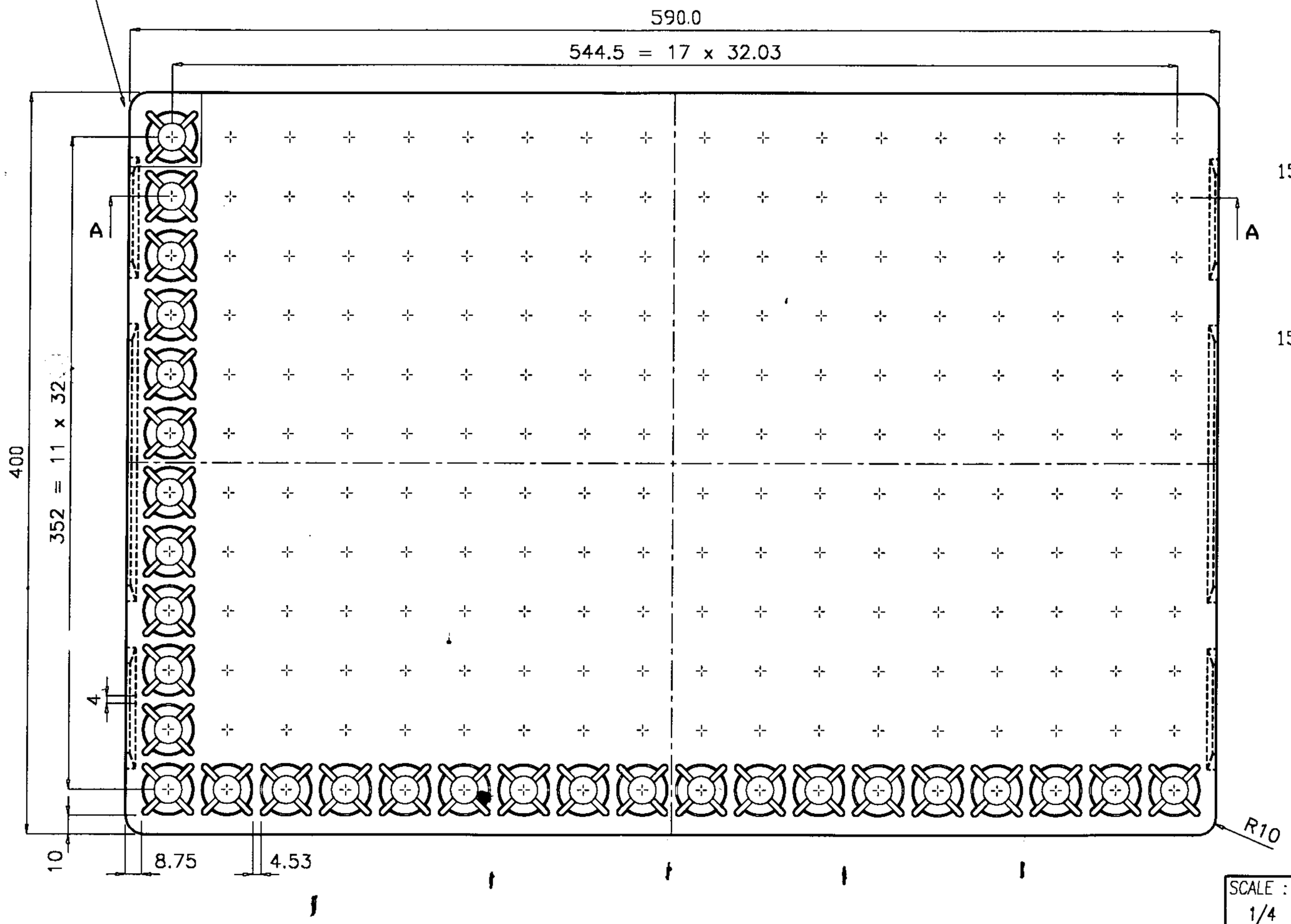

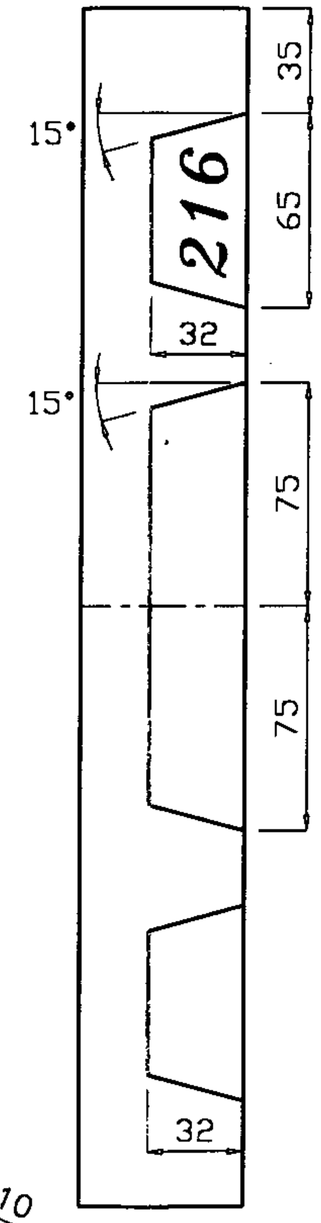

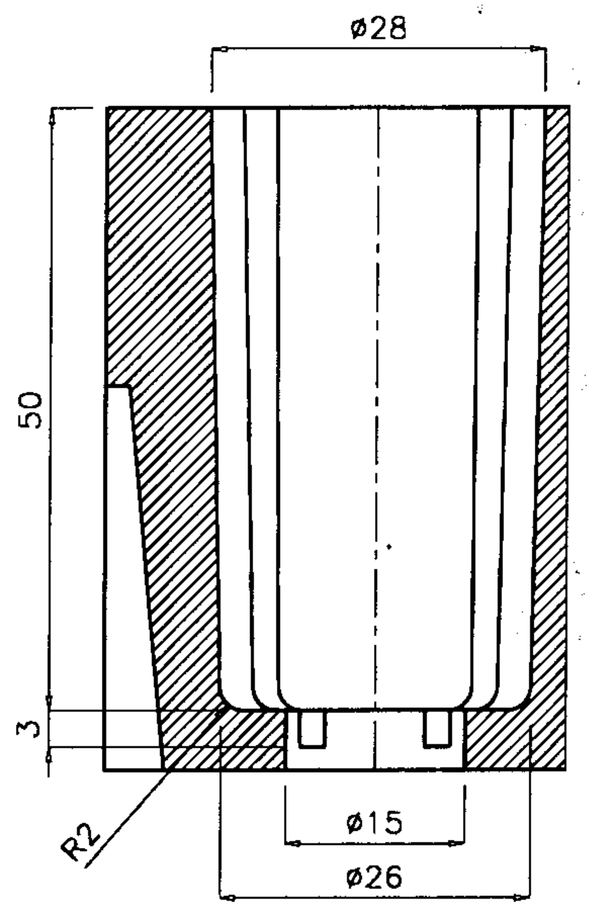

detail A
scale 1/1

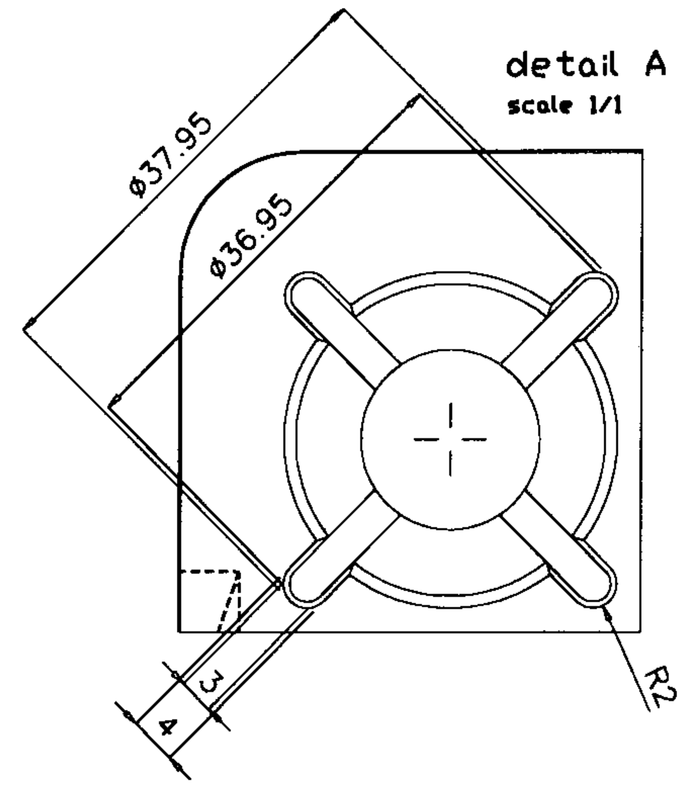

SCALE : 1/4 UNIT : MM	n.v. LEMAHIEU H.K. OUDE VAARTSTRAAT 4 – B8730 BEERNEM Tel. 050/78.91.81 – Fax. 050/78.19.68	
PROJ. EUROP.	TOL. UNLESS OTHERWISE STATED DIM. ±0.2%/min 1mm ANGLE ±30'	MATERIAL: EPS Density : 60 (±10%) gr/l
DESCRIPTION : TRAY 590x400x55 mm 216 GATEN	FILE : TRAY216	1 10.02.98
	ART. :	
	NAME : P.L.	